VRLA Rechargeable Battery

HR4-12 (HR4-12FR)

FEATURES

- Maintenance free(no water topping-up required).
- No free acid(Non-spillable battery).
- Low self-discharge rate, lower than 3% capacity loss per month.
- Can be used in any orientation(excluding used inverted).
- The battery is designed for high rate usage.
- Absorbent Glass Mat technology for efficient gas recombination.
- The power density at 5 min~15min discharging rate is 30% higher than BP series.

APPLICATION

- UPS
- Toy-Cars
- Power Packs
- Laboratory Equipment
- Fishing Lights

SPECIFICATIONS

Nominal Voltage	12 V
Nominal Capacity	3.5Ah @ 10 hour rate F.V.(1.75V/cell)
Approx. Weight	1400g(3.09lbs.)
Terminals	T1 (Faston Tab 187) T2 is optional
Internal Resistance	≦30mΩ (Fully Charged)
Max. Discharge Current	52.5 A (5 sec.)
Max. Charge Current	1.05 A
Operating Temperature Range	Charge：0°C~40°C(32°F~104°F) Discharge：-20°C~50°C(-4°F~122°F) Storage.：-20°C~40°C(-4°F~104°F)
Container Material	ABS(UL94-HB, UL94-V0 is optional)

ISO 9001

ISO14001

UL MH19884

CE C4M20310-2474-E-16

- IEC 61056-1
- JIS C 8702-1
- GB/T 19639.1

DIMENSION(mm/inch)

- **Length** 134±1.5 (5.28±0.06)
- **Width** 67±1.5 (2.64±0.06)
- **Container Height** 60±1.5 (2.36±0.06)
- **Total Height** 66±2.0 (2.60±0.08)

OUTER DIMENSIONS

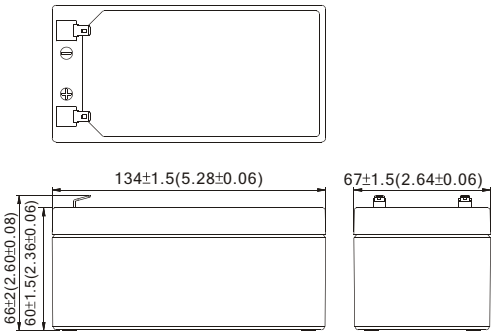

TERMINAL TYPE

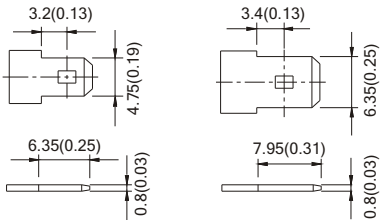

Constant power discharge characteristics at 25°C/77°F Unit: W

F.V. (V/cell) \ Discharge Time	5 Min	10 Min	15 Min	20 Min	30 Min	40 Min	50 Min	60 Min	120 Min
1.80V	164.0	112.0	81.1	69.2	52.6	40.0	33.4	29.4	16.2
1.70V	196.0	125.0	88.2	73.3	54.8	41.5	34.5	30.1	16.5
1.60V	210.0	131.5	92.2	76.0	56.0	42.5	35.2	30.6	16.8
1.50V	216.0	134.0	94.2	77.2	56.7	43.0	35.6	30.9	16.9
1.40V	220.0	135.8	95.3	77.9	57.1	43.3	35.9	31.1	16.9
1.30V	222.0	137.0	96.0	78.4	57.4	43.5	36.1	31.2	17.0

Constant current discharge characteristics at 25°C/77°F Unit: A

F.V. (V/cell) \ Discharge Time	5 Min	10 Min	15 Min	20 Min	30 Min	40 Min	50 Min	60 Min	120 Min
1.80V	14.64	9.82	7.02	5.93	4.46	3.36	2.79	2.45	1.35
1.70V	17.82	10.96	7.63	6.29	4.64	3.49	2.89	2.51	1.38
1.60V	19.09	11.54	7.98	6.52	4.75	3.57	2.95	2.55	1.40
1.50V	19.64	11.75	8.15	6.62	4.81	3.62	2.98	2.58	1.41
1.40V	20.00	11.91	8.24	6.68	4.84	3.64	3.00	2.59	1.41
1.30V	20.18	12.02	8.30	6.72	4.86	3.66	3.02	2.60	1.42

All data shall be changed without prior notice, BB reserves the right to explain and update the information contained hereinto.